A1

N

Existing 450mmØ public sewer to be diverted into a new 450mm surface water sewer to be laid as part of the road upgrade works

Construct a new manhole on the existing 450mm storm sewer and remove the existing sewer between both manholes. Divert from the existing manhole to SW MH 05

Proposed Road Storage Structure
Structure Type: 2x1500mm
Pipes Structure Length: 187m
Storage Volume: 660m³
Pipe Slope: 1:600

SW MH05
Large Diameter Manhole (4.5m x 1.5m)
CL:2.93m
IL:0.36m

450mmØ @ 1:350

2x1500mm oversized pipes

Ex. MH
CL.: 2.74m
IL.: 0.74m

SW MH 04
CL.: 2.80m
IL.: 0.67m

Ex. 450mmØ to be retained

57 Car Spaces
+4.55m

Car Park

Existing connection from Hammond Lane site

Ex. MH
CL.: 3.13m
IL.: 0.27m

ESB Substation
F.F.L. +5.00m

Road Marking

Existing Manhole cover to be raised to suit the new road level

Emergency Access Lane

Admin. Building
F.F.L. 5.00m

Admin. Area
F.F.L. +5.00m

Warehouse
F.F.L. +5.00m

Construct a new manhole on the existing 300mmØ drain from Haulbowline Road and divert into the new 4.5mx1.5m chamber on the 2 No. 1500mmØ pipes

SW MH06
Large Diameter Manhole (4.5m x 1.5m)
CL:3.28m
IL:0.16m

2x1500mm oversized pipes

SW MH
CL.: 2.52m
IL.: 0.64m
2xRG

Ex. 450mmØ to be retained

Ex. MH
CL.: 3.05m
IL.: 0.16m

Ex. MH
CL.: 2.56m
IL.: 0.67m

Ex. MH
CL.: 2.77m
IL.: 0.87m

Ex. MH
CL.: 3.26m
IL.: 1.09m

Ex. MH
CL.: 3.45m
IL.: 1.23m

Ex. MH
CL.: 3.58m
IL.: 1.35m

SW MH07
Large Diameter Manhole (4.5m x 1.5m)
CL:2.77m
IL:0.05m

Class 1 by-pass hydrocarbon interceptor

Construct a new manhole on the existing 450mm surface water drain and lay a new 450mmØ drain to connect the 1500mm pipes back to the existing surface water outfall

SW MH 08
CL.: 2.77m
IL.: 0.04m

SW MH 09
CL.: 2.77m
IL.: 0.03m

Ex. 450mmØ to be retained

Construct a new manhole, SW MH 09, on the existing 450mm surface water drain and install a new Tideflex Non-Return valve model reference TF1 Check Valve on the inlet from SW MH 08

Ex. MH
CL.: 2.78m
IL.: -0.08m

Ex. 450mmØ outfall to Gobby Beach with flap valve to be retained.
IL.: -0.28m

Ex. 450mmØ outfall pipe to Gobby Beach to be retained

Gobby Beach

CYAL50382430 © Tailte Eireann - Surveying.

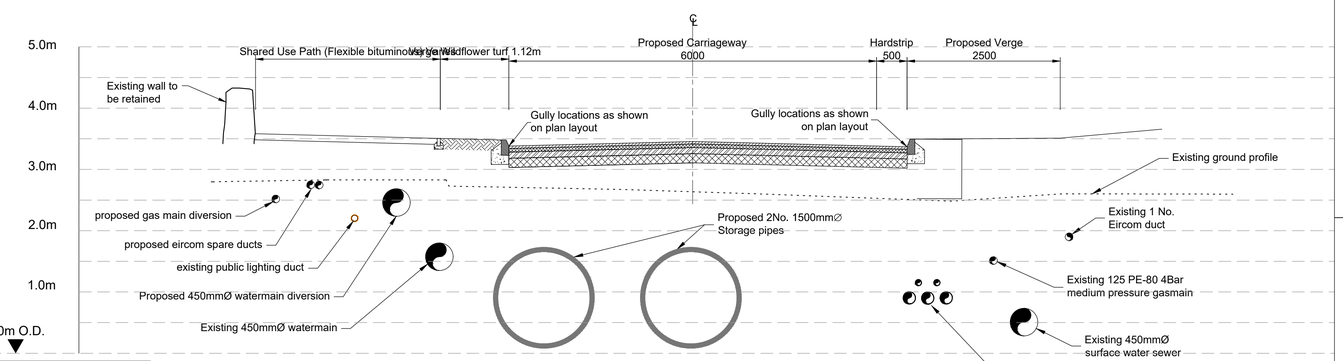

Proposed Road & Services - Section B-B

Scale: 1:50

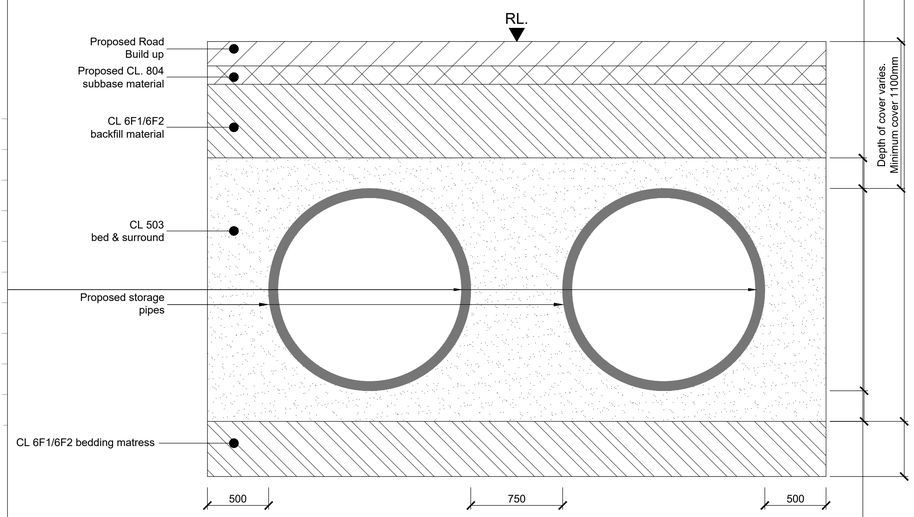

Proposed Oversized Pipework Trench Detail

Scale: 1:25

Notes:

1. Topographical survey to ITM grid reference and Malin Head ordnance datum.
2. Do not scale from this drawing.
3. All dimension are in metres unless noted otherwise.

Legend:

- Proposed 1500mmØ Pipe
- Proposed Carrier Drain
- Proposed Surface Water Concrete Channel
- Proposed Road Gullies
- Proposed Hydrocarbon Interceptor
- Existing 450mmØ Drain to be Retained
- Existing 450mmØ Drain to be Removed
- Existing 300mmØ Drain to be Retained
- Existing 300mmØ Drain to be Removed

Rev	Date	By	Chkd	Appd
PL2	29/08/25	EG	SM	JMac
Issued for RFI				
PL1	11/12/15	JB	DT	JMac
Issued for Planning				

ARUP
One Albert Quay
Cork, Ireland
Tel +353 (0)21 422 3200
www.arup.com

Client: INDAVER

Project Title: Ringaskiddy Resource Recovery Centre

Drawing Title: Proposed Surface Water Road Drainage Layout Sheet 2 of 2

Scale at A1: 1:500 u.n.o.
Role: Site Infrastructure
Suitability: Response to Request for Information
Arup Job No: 307174-00
Rev: PL2
Name: C-000-014

Do not scale

© Arup